EPSILON

Topped by a soaring white wing there is a feeling of buoyancy in the design of Epsilon. Indirect light at a height of 4m.

PRODUCT GALLERY

EPSILON

DESCRIPTION

This elegant design by Pierre Lallemand provides a soft indirect type of lighting at a height of 4 metres.

Mounting Details

- Epsilon is post-top mounted on a bespoke painted galvanized steel, flange mounted conical column.

Lamp options

- Up to 150W Ceramic Metal Halide
- Access to the lamp is by loosening the 4 captive screws sealing the glass protector to the optic.

Control gear & Control options

- Control gear is located in the base of the luminaire, accessed via a cover.

Optics

- Indirect lighting via reflector type 1601 fitted with a perforated cover allowing narrow rays of light to filter out both onto the decorative glass protector and up onto a reflective aluminium wing, which is finished in white.

Materials

- Base of luminaire in painted cast aluminium. A reflective wing made of aluminium, painted in white is set at the top of the lighting column. The optic, which is made of glass with high thermal resistance, contains the parabolic reflector and lamp. The reflector made of deep drawn, polished and anodised aluminium.
- Cylindrical conical column in painted galvanised steel available in any RAL colour.

Protection class (IP)

- Optical Compartment: IP66
- Control Gear Compartment: IP43

Electrical Class & Nominal Voltage

- Class I or II (option) / 230V 50Hz

Maximum Luminaire weight:

- 17.7kg

Standards

- EN50698/EN62622

EPSILON

DIMENSIONS

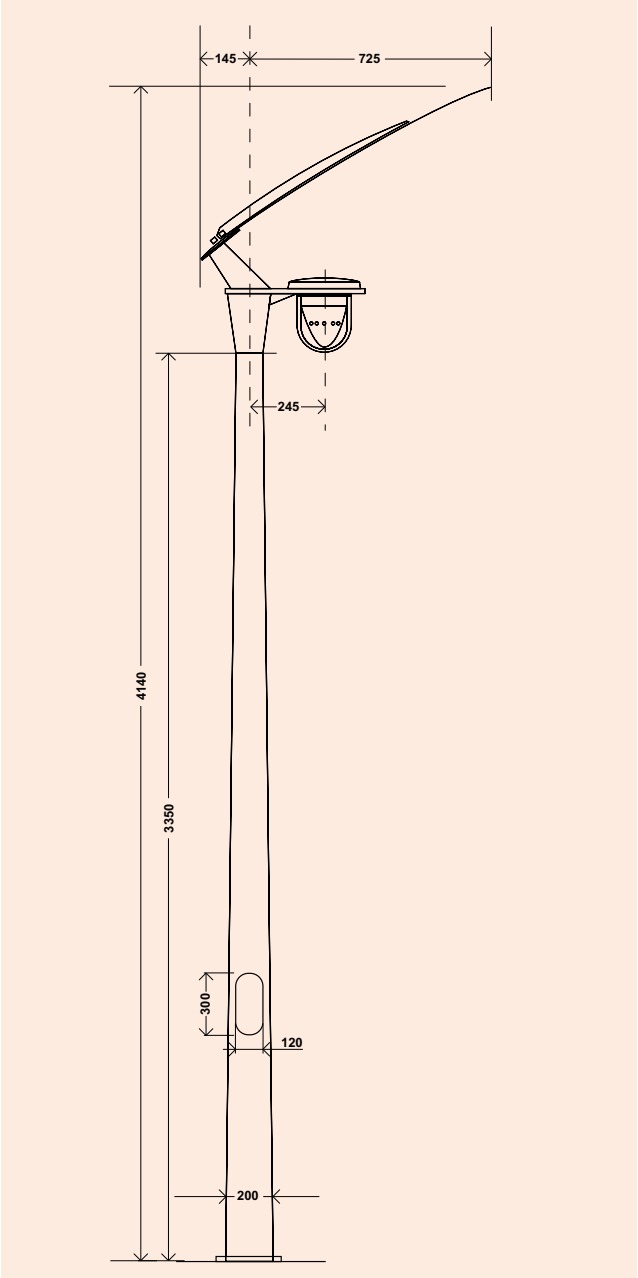

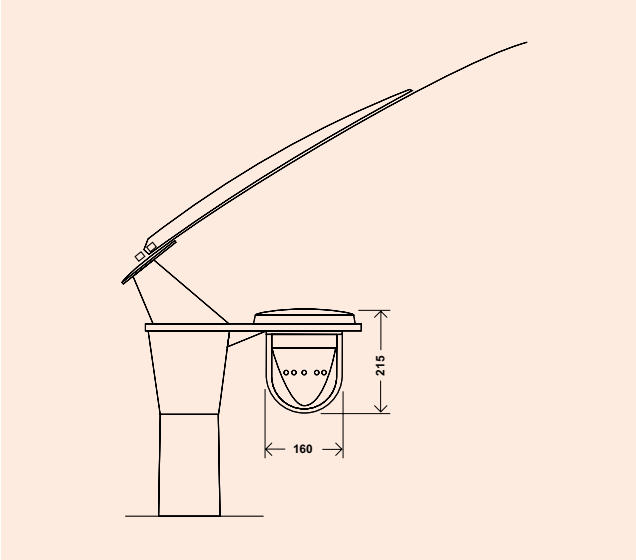

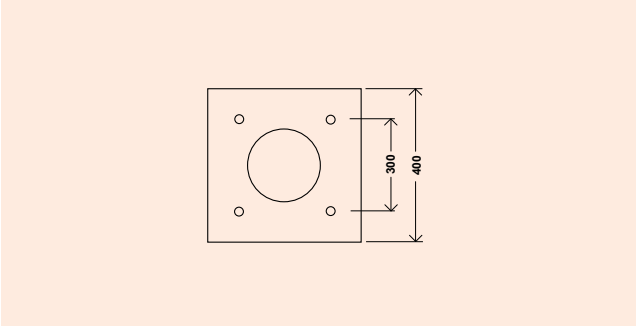

LIGHT DISTRIBUTION
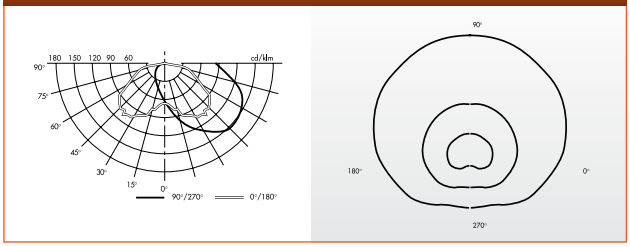
Reflector 1601